PHOENIX™

Operation Manual & Product Specification

Seating Matters™

WANT TO GO STRAIGHT?

Ensure to engage directional lock castor at front left of chair

June 2019

This Operation Manual is frequently updated to ensure safe use of your product. Visit www.seatingmatters.com where you can find a free copy of the most up to date version.

CONTENTS

2. Safety Instructions

4. Technical Specification

5. User Guide and Operating Instructions

13. Working Environment

14. Seating Matters Recycling Policy

15. Intellectual Property

16. Maintenance and Servicing

SAFETY INSTRUCTIONS

All instructions must be read and understood before the product may be used.

Terminologies

Patient: The person sitting in the chair.
User: Competent person with responsibility for the persons sitting in the chair as well as the suitability of the equipment for the Patient. The User is responsible for checking the chair for faults during the course of its use.

Assembly, Installation, Warnings & Hazards.

1. This chair should be fully assembled, all fixings secured and the chair checked for safety by a competent person before use.

2. The User must ensure that the product is in good condition before use (check all nuts and bolts are fastened, fabric in good condition etc). If there are any problems, these must be reported to your Seating Matters provider and corrected before the chair is put into use.

3. Keep all body parts away from the mechanisms under the chair. Repairs and maintenance should only be carried out by fully trained technicians.

4. Exercise care in using the release lever for the reclining mechanisms and adjustments to avoid injury.

5. Pressure ulcer or pressure injury reduction is not a guarantee with this equipment. The User must ensure that the Patient has a period out of the chair after prolonged sitting to raise tissue oxygenation levels. Although the chair offers pressure management, the body tissue still needs time to recover. In many places, local or national guidelines recommend a maximum of 2 hours sitting at any one time. You must also observe Patient specific recommendations and guidelines as set by their health professional with regard to the use of tilt and recline for appropriate pressure management.

6. The product must be used on a level, plain, hard surface with the brakes engaged to avoid it moving during use and to ensure stability. When the chair is not in transit, all the braking castors on the product must be engaged to prevent risk of injury when being used.

7. The product may not be left in an outdoor environment. More information on fabrics and their environment can be found later in this manual.

8. A competent person, trained in the use of the chair, should make adjustments and set it up according to the User requirements and Patient dimensions before the Patient sits in the chair. Where possible, adjustments should be made when the Patient is not in the chair to avoid injury to the User and Patient.

9. Ensure there is more than one competent person there when making adjustments to ensure they are correct and safe for the Patient.

10. If in doubt as to any the adjustments, feel free to contact Seating Matters direct at technical@seatingmatters.com.

11. Under no circumstances must the User or Patient stand or sit on the footplate of the chair.

12. The chair should not be transported in a vehicle while the Patient is seated on the chair.

13. This product should not be lifted at any time unless by competent persons trained in such manual handling.

14. When operating the leg rest and recline features on the chair please ensure there is a 450mm gap around the chair to prevent the back or leg rest coming into contact with a wall or any other object.

15. On powered options, please ensure that your chair is charged daily.

Please call your Seating Matters provider if you have any questions on these points.

PHOENIX™
TECHNICAL SPECIFICATION

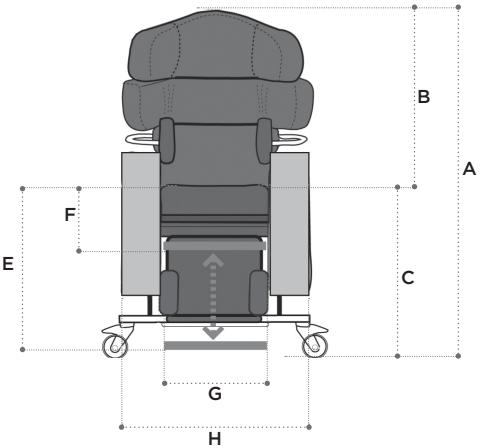

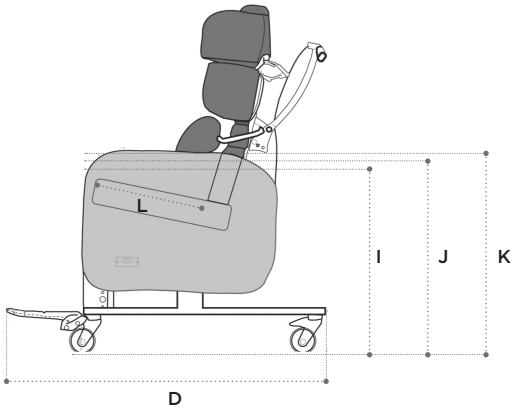

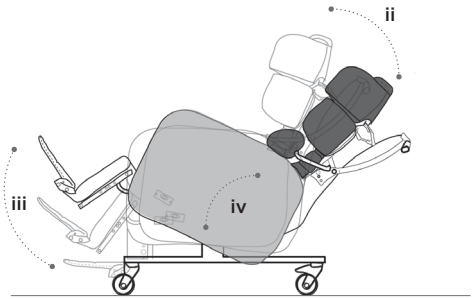

Basic dimensions

A	Overall height	1320mm/52in
B	Back height	850mm/33in
C	Seat height	600mm/24in
D	Overall Length	1200mm/47in

Footplate height adjustments

E	High	300mm/12in from seat
F	Low	510mm/20in from seat

Available seat and overall widths

G (Seat width)	H (Overall width)
350mm/14in*	640mm/25in
400mm/16in	640mm/25in
450mm/18in	670mm/26in
500mm/20in	720mm/28in
550mm/22in	770mm/30in
600mm/24in	820mm/32in

* This seat width is achieved using a 400mm/16in seat and a set of 25mm/1in padded arm covers.

Arm height options

I	Low	715mm/28in
J	Medium	740mm/29in
K	High	765mm/30in

Seat depth

L	390-480mm/15-19in (see page 9)

Recline and tilt angles

ii Back angle recline

90° - 130°

40° range

iii Leg rest angle

90° - 125°

35° range

iv Tilt in space

From 5° forward, or anterior, tilt to 30° or 45° backward tilt (dependent on chair model).

Chair weight unloaded is 67 Kg/147.71 lb/10.56 Stone.
Chair user weight limit is 159 Kg/364 lb/25 Stone.

USER GUIDE AND OPERATING INSTRUCTIONS

(fig.1)

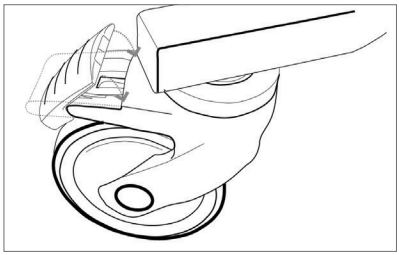

- Braking castors: The PHOENIX™ chair must be used on a plain, hard surface with the brakes engaged to ensure stability and to avoid the device moving undesirably during use. Braking castors, where provided, must be in the braked position while in use. (fig.1) A competent person, trained in the use of the chair, should make adjustments and set it up according to the User requirements and Patient dimensions before the Patient sits in the chair. Ensure there is more than one competent person present when making adjustments to ensure they are correct and safe for the Patient. Ensure all fixings are secure before allowing the Patient to sit in the chair. This includes lateral supports, arm adjustments, seat adjustment and footplate.
  Please call your Seating Matters provider if you have any questions on these points.
  This product should not be lifted at any time unless by competent persons trained in such manual handling.

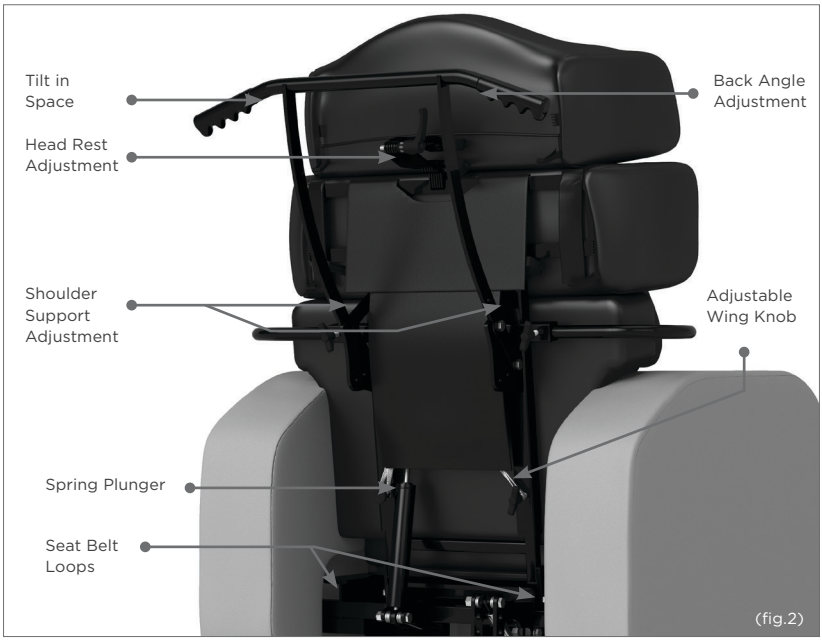

(fig.2)

- Back angle adjustment: To recline the back of the chair, the User must inform the Patient then stand behind the chair and with two hands, firmly hold the push handle while closing the release lever (fig. 2a). Move the back of the chair slowly until it is in the required position and allow the release lever to move to its relaxed position before letting go of the push handles. (fig.2) In powered options this function is adjusted using the handset. Exercise care in case of injury to Patient or damage to surrounding environment. Adjustments are performed according to the buttons on the handset. (see page 12).

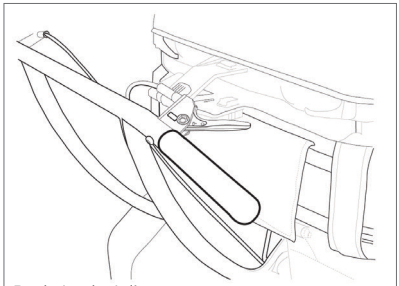
Back Angle Adjustment (fig.2a)

- Tilt in space: To tilt the chair, the user must first inform the Patient then stand behind the chair and with two hands, firmly hold the push handle while closing the release lever. (fig.2b) Tilt the chair to the required position then let go of the release lever. In powered options, exercise care in case of injury

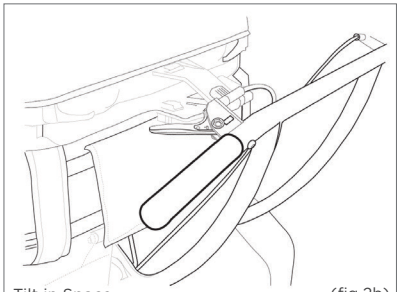
Tilt in Space (fig.2b)

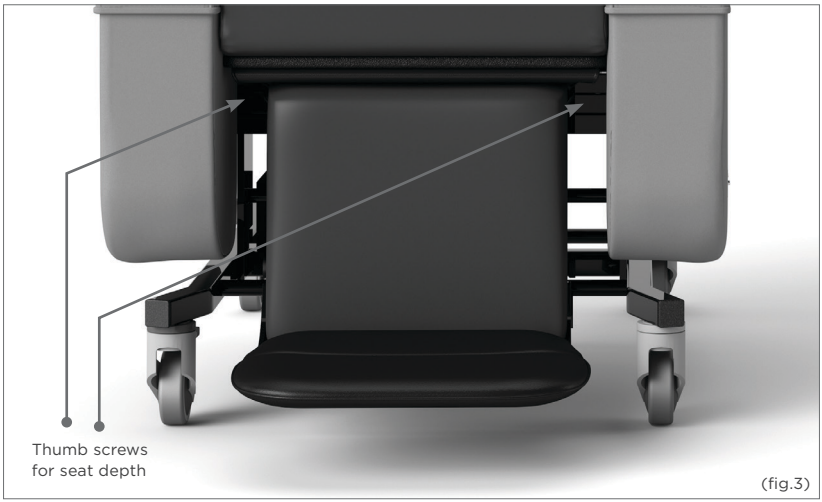

(fig.3)

to Patient or damage to surrounding environment. Powered adjustment is controlled via the handset. (see page 12)

- Seat depth: To increase or decrease seat depth, loosen the thumb screws set at 45 degrees under the seat. (fig.3 & fig.3b) Adjust the seat to the required depth by carefully pulling the seat out. Tighten the screws again to ensure the seat depth doesn't unintentionally change. (fig.3b)

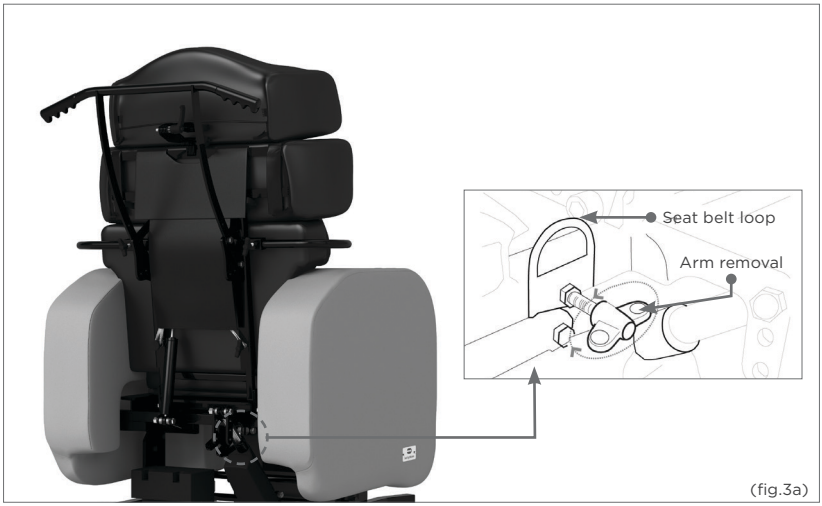

(fig.3a)

There are also four options for seat depth labelled A,B,C and D. (fig.3c) These adjustments should only be made by a Seating Matters approved provider.

A	450-480mm/18-19.5in
B	430-460mm/17-18.5in
C	410-440mm/16.5-17.5in
D	390-420mm/15.5-17in

480-500mm available on request

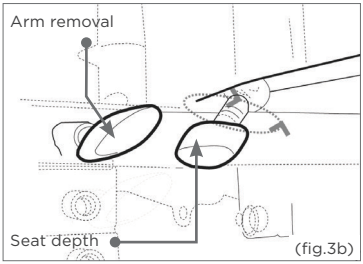

(fig.3b)

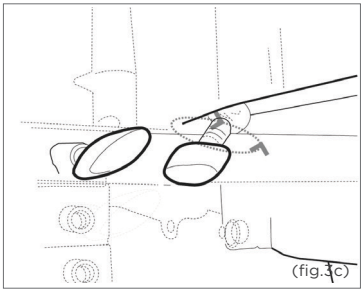
(fig.3c)

- Arm removal: To remove the arms, loosen the thumb screws behind and in front of the arm (fig.3a,b & d) and carefully pull the arm out, leaving it in a safe place to avoid tripping hazards or other injuries. When replacing the arms, ensure the thumb screws are tightened against the frame of the arm.

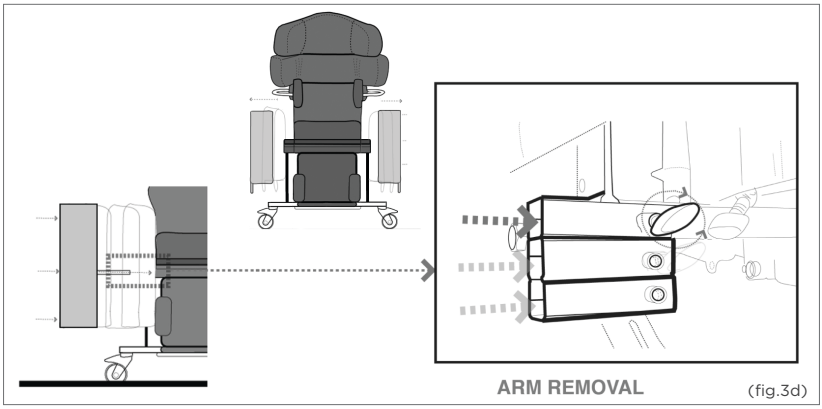

(fig.3d)

- Seat width adjustment: To adjust the seat width, loosen the thumb screws behind and in front of the arm (fig.3a,b & d) and carefully pull the arm out to the desired width (see seat width table on page 4), secure the arms in place and ensure the thumb screws are tightened against the frame of the arm.

- Arm height adjustment: To adjust the arm height, loosen the thumb screws behind and in front of the arm (fig.3a, b & d) and carefully remove the arm and insert it into the desired height option on the frame of the chair (fig.3d). Secure the arms in place and ensure the thumb screws are tightened against the frame of the arm.

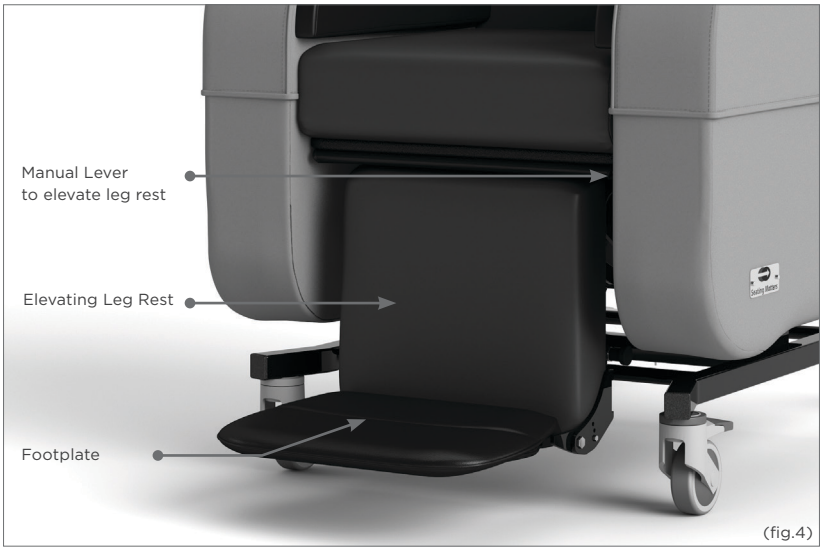

(fig.4)

- Leg elevation: Before changing the angle of the elevating leg rest, the User or Patient must ensure there are no objects in the immediate environment that could obstruct the leg rest elevation or come into contact with the Patient's legs. Using the manual lever located under the front of the seat, move the leg rest until it is in the required position and allow the release lever to move to its relaxed position. In powered options, use the handset control to move the leg rest until it is in the required position and release the button. Ensure that only the weight of the Patient's legs are placed on this leg rest. (See page 12 for motorised elevation instructions).

- Footplate height: The foot plate can be adjusted in height by pulling out the spring plungers, located on each side and sliding it up and down on the glide rail. (fig.4a) When the spring plungers are released, they will catch into the nearest hole immediately below the pins. The foot plate can also be removed by dropping it off the bottom of the chair.

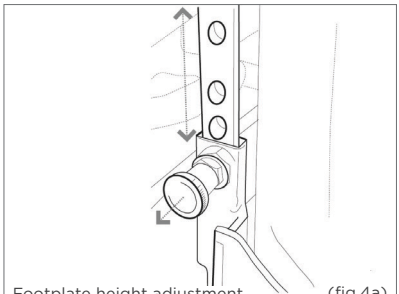
Footplate height adjustment (fig.4a)

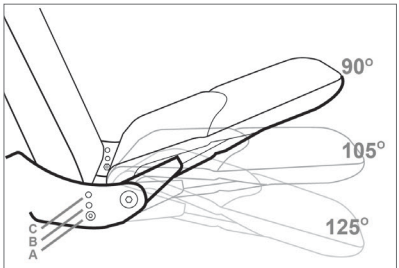

Footplate angle adjustment (fig.4b)

- Footplate angle: There are three angle settings on the footplate labelled A, B and C. (fig.4b) To change the angle of the footplate loosen the bolts at each side of the footplate (left and right), remove the bolts, set the footplate to the desired angle (A,B or C, fig.4b) and insert and tighten the bolts in the new bolt hole. Please Note: when getting out of the chair, simply fold up the footplate so that it is parallel with the calf pad. Do not stand on the footplate when getting out of the chair.

- Negative angle leg rest: The leg rest on the chair can be set at a negative angle setting for clients with tight hamstrings. See diagram below showing positions A, B and C. To change the setting loosen the bolts at each side of the leg rest (left and right), remove the bolts, move the leg rest to the desired setting and insert and tighten the bolts.

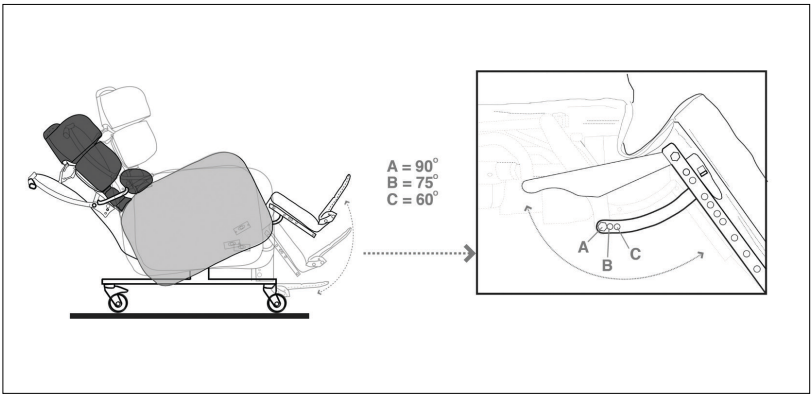

- Chair movement: To move the chair around, ensure that the back is in a fully upright position, the brakes are disengaged and push using the push handle on the back. Only a competent person should move this chair. Engage the directional lock castor on the front left of the chair to control the direction of the chair and for ease of maneuverability.

- Seat cushion: The seat cushion on the PHOENIX™ is a waterproof, pressure redistributing breathable medium foam cushion providing pressure management and comfort. The seat cushion will have non-slip material on one face and a zip closure on one side.

  To fit the seat cushion to the chair, ensure the non-slip material is on the bottom and makes contact with the non-slip material already on the baseboard, with the zip closure at the rear. This is important as the foam's structure allows good immersion and envelopment of the body ONLY when fitted as instructed.

- Partially motorised hand control: If your chair is a partially motorised model the Tilt In Space and Leg rest are controlled by the electric handset, simply push the button to operate the desired function.

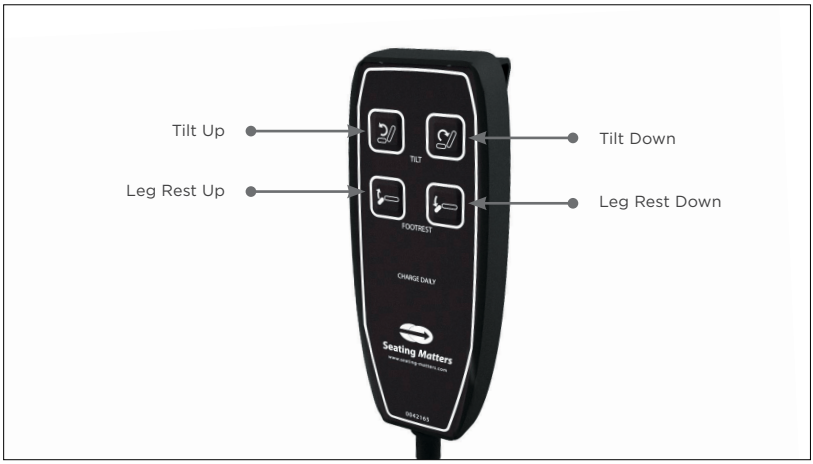

- Fully motorised hand control: If your chair is a fully motorised model the Tilt In Space, Leg rest and Back angle recline are controlled by the electric handset simply push the button to operate the desired function.

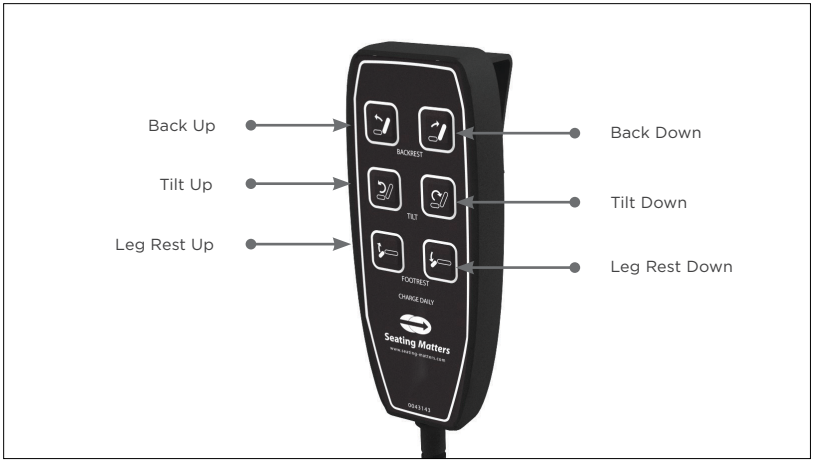

- Charging your chair (For partially motorised and fully motorised models only):
  To charge your chair, plug the charger into a wall socket and plug the connector end of the charger into the charging socket on the side of the handset (fig.5) Charge the chair until the yellow light on the charger turns green. Do not operate the chair during charging.

  IMPORTANT: PLEASE CHARGE YOUR CHAIR DAILY.

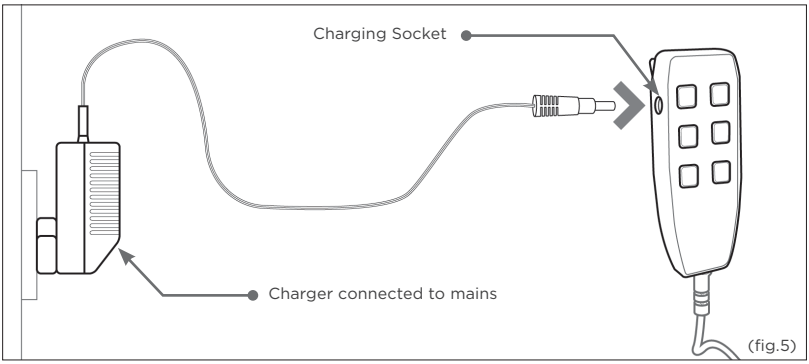

(fig.5)

- Headrest: The PHOENIX™ telescopic, vertically and horizontally adjustable headrest has pressure redistributing padding and will adjust away on both sides. This is especially useful for those will low tone in the upper body, head and neck.
  User guide and operating instructions: To adjust the PHOENIX™ headrest, first ensure the Patient is well supported and safe. Adjustment is easiest when the chair is in a neutral tilt position, with the seat level or in a slight posterior tilt. Loosen the three adjustable handles (fig.2) and carefully move the headrest to the desired position. Lock these handles in place to ensure this section of the headrest will not move. Check the two adjustable handles below the shoulder support are locked and secured also. To change the position of the sections at the side of the Patient's head, loosen the adjustable handles and carefully move this into the desired position Lock these handles in place to ensure this section of the headrest will not move.

- Back: This height adjustable, pressure redistributing, padded backrest with features to support kyphotic curve and integrated shoulder supports is a fundamental aspect of this chair.
  User guide and operating instructions: Adjust the back height on this chair before seating the Patient. Loosen the adjustable wing knob to the right of the back and ensure your fingers are clear of any areas of entrapment. (fig.2) You can then pull out the spring plunger and lift and lower the back to the desired height. The spring plunger (fig.2) will drop into the closest available hole. Ensure the adjustable wing knob is retightened against the frame. Do not lift the back off the chair or beyond the 9 inch adjustment in height from the lowest position. To adjust the angle of the shoulder supports, first ensure the Patient is well supported and safe. Adjustment is easiest when the chair is in a neutral tilt position, with the seat level or in a slight posterior tilt. Loosen the two adjustable handles (fig.2) and carefully move the shoulder support to the desired position. Lock these handles in place to ensure this section of the headrest will not move. Ensure the three adjustable handles on the head support are secured also.

WORKING ENVIRONMENT

- Dartex Multi-stretch: Waterproof, stain resistant, flame retardant, multidirectional stretch for pressure redistribution i.e. seat cushion, calf panels, lateral supports and seat back.

- Vinyl: Non-absorbent, anti-bacterial, flame retardant, strong, durable material for outer arms, outside back etc.

Cleaning and Maintenance of Fabrics

- Vinyl: (Arms and outside back)Vinyl is resistant to urine, most household stains, mild acids/alkalis, drinks and beverages as they are not absorbed and can be wiped off without any problem or lasting damage. Some difficult substances such as lipstick, ball point pen ink and food colourings should be cleaned off immediately to avoid permanent staining.

- Cleaning: To ensure proper cleaning and longevity of the fabrics, the chairs should be cleaned with warm soapy water followed by a clean water rinse to help retain the attractive appearance and durability. Heavy, ingrained soiling may be removed by scrubbing with a soft brush. Strong detergents, solvent cleaners, polishes or patent chemical cleaners should not be used as they are unnecessary and may cause embrittlement and cracking of the material. Additional Care – special attention should be given to head rest and arm rest areas, as build-up of body oils in these areas will gradually cause the vinyl to harden.

Dartex Multi Stretch Fabric (Patient contact surface)

Properties: This fabric is waterproof, has the ability to be wiped clean and has biostatic (anti-mycotic) coatings to provide an impenetrable barrier to virus and bacteria. Superficial dirt may be removed by wiping with a soft cloth moistened with water containing a neutral detergent. More persistent contamination may be treated by wiping with alcohols or turpentine substitute, followed by hot water and detergent. Routine cleaning and disinfection may be carried out on the coating with hand hot water and a neutral detergent or with a sodium hypochlorite solution (0.1% or 1000 parts per million available chlorine). The material is compatible with the 10,000ppm available chlorine in solution required for the decontamination of blood spills. Excess solution must be removed and the surface thoroughly rinsed and dried prior to reuse or storage. Proprietary disinfectants may be used provided manufacturer's instructions are followed. All cleaning agents, and disinfectants, must be thoroughly rinsed off and the item dried before storage.

Failure to do this may result in damage to the polyurethane coating, react with the chair frame, or negate the biocompatibility results of the fabric. It is essential that articles be thoroughly dried after all cleaning procedures and before storage.

SEATING MATTERS RECYCLING POLICY

Seating Matters are committed to reducing waste and improving our care for the environment. We aimed to construct our chairs with as many recyclable materials as possible that could be repurposed indefinitely.

The WEEE Directive

The WEEE Directive, 2012/19/EC, urges producers of Electrical and Electronic Equipment (EEE) to provide information on how these products can be treated, reused or recycled.
In order to comply with this directive in the European Union, Seating Matters electrical components are marked with a crossed out wheelie bin. This indicates that the electrical components should be treated in accordance with the WEEE regulations after their useful life.

Advice on Recycling

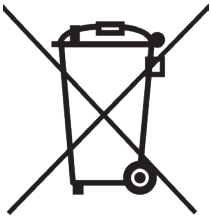

- Your Seating Matters product may contain batteries which should not be disposed of in household waste.
- Never dispose of the battery in a fire. This may cause an explosion.
- The product may contain substances that could be harmful to the environment.
- Electrical components must be taken to a proper recycling facility.
- Your Seating Matters product contains component parts which can be recycled.
- We thank you for being environmentally responsible and for making efforts to recycle your Seating Matters product at the end of its' safe and useful life.
- Contact your local authority or governmental agency for the regulations that apply in your area.
- If you wish to have Seating Matters recycle your product and your behalf, you are welcome to return the product to our company.

Plastic Components

Many of our plastic components are made from polypropylene and can be recycled as long as they are recycled with other polypropylene resin materials. Polypropylene sheets can be recycled with any other materials that have this symbol.

Plastic Trays

Our plastic tray tables are made from Polyethylene Terephthalate Glycol (PETG) which is a sturdy, transparent, easily cleaned material. Like acrylic, PETG is 100% recyclable and can be recycled and repurposed indefinitely. Capable of being sterilized, it's a renowned food-safe

material and will help us meet a higher standard towards infection prevention & control. PETG's damage resistance is far higher than that of acrylic & has an impact resistance 30 times that of glass. PETG can be recycled with any other materials that have this symbol.

Safety

The PHOENIX™ is CE marked to show conformance to the Medical Devices Directive 93/42/EEC and conforms to BS ISO 7176 at medium hazard.

Regional Variations

The device referred to as a "Phoenix™" is a Seating Matters product category and the information included in this document reflects common features of this group of products. In some regions of the world, we supply product design variations of equivalent function and ease-of-use but with alternative specifications or reinforcements.

INTELLECTUAL PROPERTY

Seating Matters are at the forefront of seating research and design, therefore we take the protection of our intellectual property very seriously and have our designs, patents and trademarks protected in many jurisdictions throughout the world.

- US Design Patent: No. 601360S, No. D611718; No. 600932, No. D602704S.
- Australian Design Registration: No. 325536, No. 324011, No. 325537, No. 324012.
- Community Design Registration: No. 001016364-002, No. 000942180-0004, No. 002428813-0001, No. 001016364-001, No. 012673018.
- Canadian Design Registration: No. 130224, No. 128763, No. 130217, No. 128764.
- The Seating Matters Trademark is registered throughout the European Union and various countries globally.

PHOENIX™
MAINTENANCE AND SERVICING

Regularly servicing your Seating Matters chair will prevent untimely and inconvenient breakdowns, reduce repair costs and extend the chair's life. Damage to the chair can also cause excess strain for the User and Patient.

Important

Parts can only be changed by service persons trained in Seating Matters products and use only Seating Matters parts. We recommend that your chair is serviced every year by a Seating Matters approved provider for any running repairs and maintenance.

Maintenance

Carry out the following regular checks to ensure the operation and safety of the chair. If you are in any doubt about the functioning of your chair contact your Seating Matters approved provider immediately.

Daily

- Check that the castors are not damaged.
- Check that the castors turn freely.
- Make sure that the castor forks run free and are not bent.
- Check all fabrics for damage or contamination and replace where necessary.
- See Cleaning and Maintenance of Fabrics section in manual for cleaning instructions.
- Check batteries and electrical connections are secure.

Weekly

- Check the castor fittings for hair and dirt etc. which could restrict the castor movement.
- Pick out any such material with tweezers or take the spindle out, clean it and then replace it.
- If it is still not free (one continuous turn without it sticking) contact your Seating Matters approved provider for replacement.

Monthly

- Castors: Make sure the top of the castor housing is parallel with the floor. Any variation will cause restricted movement. If it is damaged contact your Seating Matters approved provider for replacement.

- Mechanisms:
  Check all tilting mechanisms are working smoothly.
  Check that cables are not kinked or frayed.
  Check that all nuts and bolts are present.
  Check that all nuts and bolts are secure.

Note: If nuts or bolts need attention, contact your Seating Matters approved provider IMMEDIATELY and DO NOT USE the chair until it has been serviced.

- Leg rest: Check that all leg rests are easily removed/swung-away and replaced or repositioned easily. Ensure that parts lock in place securely. If parts are not locking try lubricating. If the problem still remains contact your Seating Matters approved provider.

- Frame: Check the visible parts of the frame for cracks, splits, large dents or other damage. If you find any of these things DO NOT USE. Contact your Seating Matters approved provider immediately.

WE ARE HERE TO HELP

For any questions or queries regarding your Seating Matters chair please contact:
contact@seatingmatters.com

WE ARE HERE TO HELP

For any questions or queries regarding your Seating Matters chair please contact:
contact@seatingmatters.com

VIEW OUR FULL RANGE OF CHAIRS & ACCESSORIES ONLINE

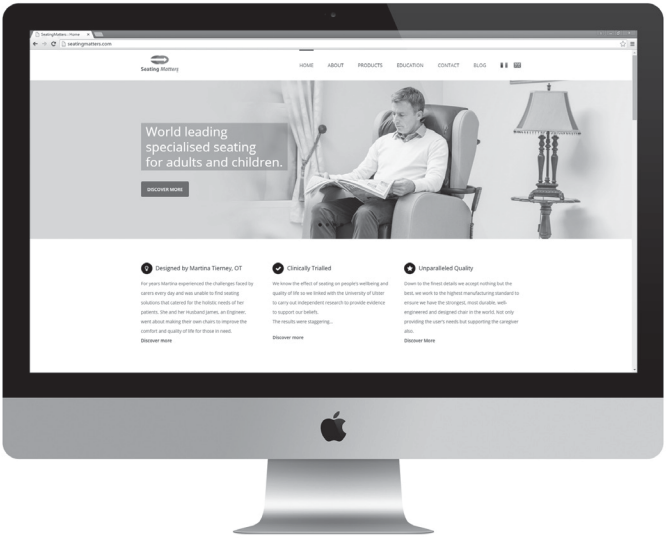

WWW.SEATINGMATTERS.COM

Australia
2/6 St James Place
Seven Hills,
NSW 2147
Australia
Tel: +61 1300 001 050
australia@seatingmatters.com

Canada
269 Maplegrove Rd
Colborne
ON, Canada
K0K 1S0
Tel: +1 (905) 507 9007
canada@seatingmatters.com

N.Ireland & ROI
131 Carnamuff Road
Limavady
Northern Ireland
BT49 9JG
Tel: +44 (0) 28 777 666 24
contact@seatingmatters.com

UK & Europe
1st Floor
239 High Street Kensington
London, UK
W8 6SN
Tel: +44 (0) 20 3982 2900
london@seatingmatters.com

USA
300 International Drive
Suite 100
Buffalo, NY 14221
USA
Tel: +1 (315) 466 8973
usa@seatingmatters.com

Seating Matters™
www.seatingmatters.com